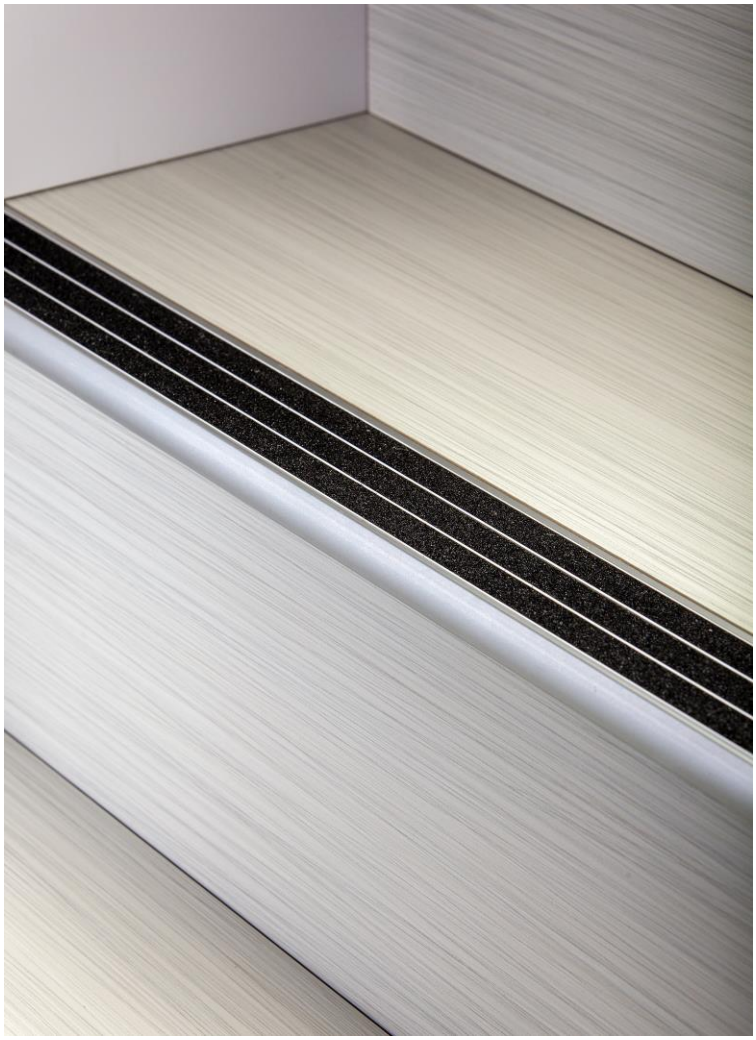

ALUMINUM NOSING PROFILES &
PHOTOLUMINESCENT AND/OR CARBORUNDUM
CONTRAST ANTI-SLIP STEP EDGE STRIPS

ADA Solutions – A SureWerx™ Brand

www.adatile.com
www.surewerx.com

PHOTOLUMINESCENT & CARBORUNDUM ALUMINUM STAIR NOSINGS & NON-SLIP INSERT STEP EDGE CONTRAST STRIPS

ADA Solutions photoluminescent exit path marking products consisting of stair nosing and non-slip insert strips in conformance with the requirements of the International Building Code 403.16 Section 1024, NFPA 101 Life Safety Code and New York City Reference standard RS 6-1 and 6-1A (pre-2014 Code Buildings), and designed to meet new ICC regulations for new buildings over seven (7) story's high, ULC572, UL 1994, ADA and AODA requirements for non-slip step edge color contrast.

Photoluminescent products have the advantage of providing highly visible emergency signage and lighting that is non-electric, non-radioactive, durable, maintenance-free, weather-resistant, and UV stable. ADA Solutions photoluminescent products can be used in combination to provide a visible Exit Path Marking System for safe emergency egress after a power failure. These products recharge in daylight or interior lighting visibly for several hours after the lights go out, charged from an overhead light source.

This specification can be used to specify ADA Solutions extruded aluminum stair nosing and non-slip step edge insert contrast strips with an integral photoluminescent/carborundum strip.

We trust this overview of the ADA Solutions Photoluminescent, Non-Slip System, together with the information in our submittal package, helps determine the ADA Solutions Photoluminescent, Non-Slip System is best suited for your project requirements.

Yours truly,

Sandro Pinto
Business Development Manager

ADA Solutions - A SureWerx™ Brand
spinto@surewerx.com
1-800-372-0519

PHOTOLUMINESCENT & CARBORUNDUM NON-SLIP STEP EDGE INSERT COLOUR CONTRAST STRIPS & ALUMINUM NOSINGS

PART 1 — GENERAL

1.01 RELATED DOCUMENTS

A. Drawings and general provisions of the Contract, including General Conditions, Supplementary Conditions and Division-1 General Requirements apply to the work of this section.

1.02 WORK INCLUDED

A. Furnish and install the complete ADA Solutions Photoluminescent Contrast Stair Nosing system.
   1. Surface Applied (Retrofit) Aluminum Stair Nosing
   2. Cast-in-Place Aluminum Stair Nosing
   3. Tile Aluminum Stair Nosing
   4. Photoluminescent/Carborundum Aluminum Non-Slip Insert, Color Contrast Step Edge

1.03 RELATED WORK

A. Related work that is specified elsewhere.
   1. Concrete work: Section 03 30 00.
   2. Metal Stair construction: Section 05 51 00

1.04 REFERENCES

A. Publications listed herein are part of this specification to the extent referenced. The criteria established in the specifications shall take precedence over the standards referenced herein. (Examples of reference standards are given below.)

   1. American Society for Testing and Materials (ASTM):
      a. ASTM B 221, Standard Specification for Aluminum and Aluminum-Alloy Extruded Bars, Rods, Wire, Shapes and Tubes.

   2. International Organization for Standardization (ISO):

a. ISO 17398, Safety Colors and Safety Signs – Classification, Performance and Durability of Safety Signs.
b. ISO 7010 (2003-10-01), Section E001, E002, E005, E006: Graphical Symbols – Safety Colors and Safety Signs – Safety Signs Used in Workplaces and Public Areas

3. American National Standards Institute (ANSI):
   a. ANSI Z535.1-2002, American National Standard for Safety Color Code

4. Underwriters Laboratories
   a. UL 410 – Standard for Slip Resistance of Floor Surface Materials.
   b. UL 1994 - Standard for Luminous Egress Path Marking Systems
   c. ULC S572 – Standard for Photoluminescent and Self-Luminous Exit Signs and Path Marking Systems

1.05 SYSTEM DESCRIPTION

A. Photoluminescent & Carborundum non-slip insert strips shall be 2” (50 mm) wide and form an integral part of the stair treads. The leading edge of all stair nosing assemblies shall be fastened into the flooring substrate, cast-in-place into concrete, or grouted.
   1. Mechanical fasteners shall be used to anchor stair nosing to the flooring substrate.
   2. Adhesives may be used in conjunction with mechanical fasteners to affix stair nosing or non-slip step edge strip to the flooring substrate.
   3. Adhesives may not be used as the sole means for affixing stair nosing or non-slip step edge insert strip to the exterior flooring or wood substrate.
   4. Non-slip step edge insert strips shall be all carborundum or 50/50 filled with photoluminescent material to improve slip resistance.
   5. Stair nosing treads shall meet OSHA Barrier-Free Code requirements for stair design in public buildings.

1.06 QUALITY ASSURANCE

A. Manufacturer: Obtain stair nosing & non-slip step edge strips assemblies through one source from a single manufacturer.
   1. Photoluminescent performance complies with UL 1994 and ULC S5272 for interior and exterior use.
   2. The manufacturer shall be ISO 9001 Certified.
   3. Manufacturer shall have a minimum of five (5) years of experience in the fabrication of stair nosings, photoluminescent & non-slip step edge strip systems.

1.07 SUBMITTALS

A. Submit manufacturer's specifications and technical data, installation instructions, as required, and catalog cuts and templates where required to explain the construction and incorporate it into the project.

B. Submit shop drawings showing complete fabrication details for all stair nosing, non-slip step edge, and photoluminescent strips.

C. Submit one (1) 6” (152 mm) sample of the specified system.

1.08 DELIVERY, STORAGE, HANDLING, AND SITE CONDITIONS

A. The contractor shall protect all the finished surfaces of the stair nosing, non-slip step edge, and photoluminescent strips with a protective painters tape to provide protection and eliminate concrete, adhesive and/or grout residue and staining during construction.

B. Delivery of the stair nosing, non-slip step edge, and photoluminescent strips to the construction site, shall be suitably packaged in original packaging and/or crated to prevent damage in shipment and handling.

C. Store the product in its original packaging in a clean, dry location.

D. Environmental conditions and protection: Maintain a minimum temperature of 40°F (4°C) in spaces to receive stair nosing, non-slip step edge, and photoluminescent strips at least 24 hours before installation, during installation, and for not less than 24 hours after installation.

E. The use of water for work, cleaning or dust control, etc. shall be contained and controlled and shall not be allowed to come into contact with the general public. Provide barricades or screens to protect the general public.

1.09 WARRANTY

A. Submit manufacturer's warranty that materials furnished will perform as specified for period of not less than five (5) years when installed following manufacturer's recommendations.

B. Stair nosing, non-slip insert step edge photoluminescent/carborundum strips shall be warranted in writing for five (5) years from the date of delivery. The guarantee includes manufacturing defects, breakage, cracking, UV stability, deformation, and workmanship.

C. If the Customer has a warranty claim, it must notify ADA Solutions Customer Service immediately so that a sales representative can inspect the product. Suppose the claim meets the terms of the product warranty in ADA's judgment. In that case, ADA shall replace the defective products forthwith, always provided that ADA shall not be responsible for any installation costs so incurred by the Customer. The preceding

product warranty does not apply to and will be void in any of the following circumstances:

1. The products have been installed by an installer who has not been professionally trained; or
2. The products have not been installed correctly following the official installation instructions that form part of this specification; or
3. The products have been modified from their original factory production; or
4. The products have been used outside of their stated specifications and/or operating capacity; or
5. The products have been improperly used, maintained, or repaired; or
6. The products have been misused, damaged, abused or involved in an accident.

1.10 INSTALLATION WARRANTY

A. Installation shall be warranted in writing for a period of two (2) years by the installer. Alternate products not approved by the architect/engineer and the project owner before the tendering phase must be guaranteed for an additional three (3) years by the installer. Products must be guaranteed from defective work and loosening.

PART 2 — PRODUCTS

2.01 MANUFACTURERS

A. Basis of Design: Stair nosing, non-slip step edge, and photoluminescent strips as manufactured by:

ADA Solutions:
323 Andover Street
Suite 3
Wilmington, MA 01887
Toll-Free: 800-372-0519
www.adatile.com

B. Stair nosing system, [Manufacturer's model number and description]:

Image	Product Number	Full Description
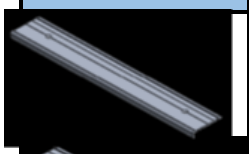	DFSN100	Anodized aluminum flat retrofit nosing, round front bull nosing, 10 FT (3048 mm) long
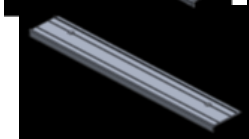	DFSN200	Anodized aluminum flat retrofit nosing, 90˚ front edge nosing, 10 FT (3048 mm) long
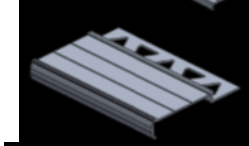	DTILE100	Anodized aluminum, tile round nosing, 10 FT (3048 mm) long
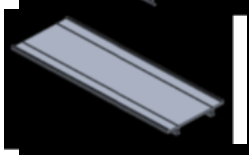	DCIPN100	Anodized aluminum, cast-in-place nosing, 10 FT (3048 mm) long
	DNSICPB	Anodized aluminum, non-slip strip insert, with photoluminescent/carborundum material, 51 mm (2“) wide by 10 FT (3048 mm), Black color
	DNSICPY	Anodized aluminum, non-slip strip insert, with photoluminescent/carborundum material, 51 mm (2") wide by 10 FT (3048 mm), Yellow color
	DNSICPG	Anodized aluminum, non-slip strip insert, with photoluminescent/carborundum material, 51 mm (2") wide by 3048 mm (10 FT), Gray color
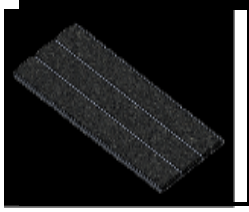	DNSICB	Anodized aluminum, non-slip strip insert, with carborundum, 2” (51 mm) wide by 10 FT (3048 mm), Black color
	DNSICY	Anodized aluminum, non-slip strip insert, with carborundum, 2” (51 mm) wide by 10 FT (3048 mm), Yellow color
	DNSICG	Anodized aluminum, non-slip strip insert, with carborundum, 2” (51 mm) wide by 10 FT (3048 mm), Gray color

2.02 MATERIALS

A. Aluminum: Alloy 6063-T5

B. Photoluminescent: 1:1 Ratio of phosphorescent pigment, strontium aluminate, combined with two (2) component epoxy resin that is applied to an aluminum substrate.

C. Abrasive: Two (2) component epoxy resin & carborundum material applied to an aluminum substrate.

D. Fasteners are required for complete installation to the manufacturer's instructions.
   1. Retrofit stair nosing or non-slip insert step edge strips:
      ii. Recommend #10 x 1" Flat Head, 82° Robertson Drive (CDN) or Philips Drive (US) fasteners for either Concrete, Wood or Sheet Metal with appropriate polymer/metal plugs/anchors.

E. Adhesive: Single part polyurethane adhesive. Follow the adhesive manufacturers' requirements for storage and overall tube coverage for 1/8 inch (3 mm) bead.

2.03 FINISHES

A. Aluminum nosing profiles and non-slip insert step edge strips shall be:
   1. Under DIN EN ISO 2143: Anodizing of aluminum and its alloys - Estimating loss of absorptive power of anodic oxidation coatings after sealing - Dye-spot test with prior acid treatment (ISO 2143:2017).
   2. Class I coating with a mil thickness of 0.7 (18 microns) or greater.

B. Slip-resistant surfaces shall be:
   1. Carborundum material shall have a: Black, Yellow or Gray (Approved Color selected from manufacturer's standard colors. (Custom colors, as determined and approved by the architect).

PART 3 — EXECUTION

3.01 EXAMINATION

A. Installer shall examine conditions under which work is to be performed and shall notify the contractor in writing of unsatisfactory conditions. The installer shall not proceed until unsatisfactory conditions have been corrected in a manner acceptable to the installer.

B. Verify that when installed, the photoluminescent surfaces of the stair nosing will be It is exposed to sufficient activating illumination a minimum of 11 Lux (1 foot-candle) to ensure the photoluminescent strip will be effectively charged and meet the required brightness rating.

3.02 INSTALLATION

A. Install stair nosing following the governing jurisdiction regulations, the industry standards applicable to the work, and the manufacturer's written installation instructions.
   1. Cast-in-place stair profile nosing shall be installed with the concrete pour.
   2. Surface applied (retrofit) nosing profiles shall be installed in the final stages of construction.
   3. Tile stair nosing shall be installed with the tile flooring installation.

B. Work shall be aligned plumb, level and, where required, flush with adjacent surfaces and rigidly anchored to the substrate.

C. Stair and Leading Edge Nosing shall be rigidly anchored to the substrate and cover the full length of each step and landing edge.

3.03 REQUIRED TOOLS & MATERIALS – NOSING/STEP EDGE INSERT STRIPS

Acetone Cleaner	Roller (After adhesive application)	Hammer Drill w/ 1/4” Appropriate Drill Bit
Caulking / Adhesive Gun	Single-part Polyurethane Adhesive	#10 x 1" Flat Head Fastener
Scraper / Brush / Pan / Shop Vacuum	Soft Cloth, Dust Mask,	#10 x 1-1/4" Plastic Anchor
Non-ferrous Metal Cutting Blade	Table / Circular Saw / Hand Grinder	Straight Snips / Cutting Shears / Utility Knife
Tile Spacers, Sponge,	Thin-set, Rubber Trowel, Grout	Screed Board, Trowel
5-gallon Bucket	Tile Cutter	Cement

3.04 INSTALLATION – SURFACE APPLIED (RETRFOIT) PROFILE NOSINGS & STEP EDGE NON-SLIP INSERT CONTRAST STRIPS

A. Surface Preparation

- Thoroughly clean the surface with an appropriate floor cleaner.
- Remove any paint or sealant.
- Clean all loose and flaking material from the surface.
- Allow the surface to dry thoroughly
- If painted or coated, check that adhesive is compatible with the paint or coating.

B. Aluminum Profile Nose & Step Edge Insert Strip Cutting

- After measuring the step edge (follow local building code requirements) cut the aluminum nosing using a non-ferrous metal cutting blade with a table/circular saw or hand grinder.
- After measuring the step edge (follow local building code requirements), cut the step edge insert strip with a straight snip or cutting shears to the same length of the aluminum nosing profiles.

C. Multiple Step Alignment

- Place the one piece of nosing on the top step and one on the bottom step (according to local building code requirements).
- Run a string line from the left edge of the top nosing to the left edge of the bottom nosing to give you a straight, accurate line.

D. Drilling the Substrate

- Place the nosing firmly against the riser of the step.
- Line it up with your string line.
- Mark the location of the pre-drilled, countersunk aluminum nosing profile holes.
- Using a 1/4 inch (6.35 mm) appropriate bit, drill the hole that will house the plastic anchor.

E. Inserting Anchors & Applying the Adhesive

- Wipe away any dust or debris with a brush or shop vacuum.
- Place the plastic anchor entirely into the drilled holes

- Apply a 1/8 inch (3.2 mm) bead of polyurethane adhesive in a wave pattern over the full length of the underside of the aluminum profile nosing.
- Keep the polyurethane adhesive clear of the outside edge and the pre-drilled holes.

F. Securing the Nosing Profile & Step Edge Insert Strips

- Place the aluminum profile nosing firmly back onto the step, lining up the drill holes.
- Tighten the fasteners firmly, creating a strong, even bond.
- If excess adhesive comes out aluminum profile nose edge(s), take care not to step on the excess adhesive while it cures.
- Clean back of contrast strip with a soft cloth and, if necessary, use acetone (or similar solvent) to remove dust, dirt any other debris, and allow to dry for approximately one (1) minute.
- Apply a 1/8 inch (3.2 mm) bead of polyurethane adhesive in a wave pattern over the full length of the underside of the step edge insert strip.
- Apply even pressure to spread the adhesive beneath the strip using a hand roller.
- **NOTE:** Place in position on the aluminum nosing profile with the photoluminescent (glow) strip to the front edge of the step edge.
- When the adhesive has cured, trim excess from each strip with a sharp utility knife being careful not to damage or scratch the aluminum nosing profile.
- Immediately following the installation, close off the area for 8 hours to avoid the damage or moving while the adhesive is in the early stages of curing.

NOTE: *The maximum recommended length for installation in outdoor situations is 5 foot (1524 mm), with a minimum 0.2 inches (5mm) gap between lengths. This allows for thermal expansion in extreme weather conditions and aids in water drainage off the step tread.*

3.05 INSTALLATION – SURFACE APPLIED (RETRFOIT) STEP EDGE NON-SLIP INSERT CONTRAST STRIPS (WITHOUT THE ALUMINUM NOSING PROFILE)

A. Surface Preparation

- Thoroughly clean the surface and step edge insert strip with an appropriate cleaner.
- Clean all loose and flaking material from the surface.
- Remove any paint or sealant.
- If painted or coated, check that adhesive is compatible with the paint or coating.
- Allow the surface to dry thoroughly

B. Step Edge Non-Slip Insert Contrast Strips Cutting

- After measuring the step edge (follow local building code requirements) cut the insert step edge strip with a straight snip or cutting shear.

C. Multiple Step Alignment

- Place the one piece of step edge insert strip and one on the bottom step (according to local building code requirements).
- Run a string line from the left edge of the top step edge insert strip to the left edge of the bottom step edge insert strip to give you a dedicated straight line.

D. Drilling the Substrate

- If in doubt about your strips' adhesion to the substrate, use mechanical fasteners with anchors for additional security.
- Place the step edge insert strip firmly on the substrate of the step edge.
- Place the step edge insert strip starting max of 1 inch (25.4 mm) from the leading edge of the step edge.
- Line it up with your string line.
- Drill and countersink the holes through the carborundum portion of the step edge insert strip.
- If installing on to wood in an outdoor situation, mechanical fasteners must be used. Fasteners holes must be 1 inch (25mm) in from each end and no more than 16 inches (406.4 mm) apart.
- Using a 1/4 inch (6.35 mm) appropriate bit, drill the hole that will house the plastic anchor.

E. Inserting Anchors & Applying the Adhesive to the Step Edge Insert Strip

- Drill the holes in the step edge insert strip through the strip into the substrate to appropriate anchor depth.
- Remove the strip from the step edge and clean out the anchor holes with a shop vacuum.
- Wipe away any dust or debris with a brush or the shop vacuum and ensure the strip is free of dust with a soft cloth.
- Place the plastic anchor entirely into the drilled holes
- Lay a 1/8 inch (3.2 mm) bead of polyurethane adhesive in a wave pattern over the full length of the underside of the step edge insert strip.
- Keep the polyurethane adhesive clear of the outside edge and the pre-drilled holes.

F. Securing the Step Edge Insert Strip

- Place the step edge insert strip firmly back onto the step, lining up the drill holes.
- Tighten the fasteners firmly, creating a strong, even bond.
- Apply even pressure to spread the adhesive beneath the strip using a hand roller.
- If excess adhesive comes out aluminum profile nose edge(s), take care not to step on the excess adhesive while it cures.
- When the adhesive has cured, trim the excess from each strip with a sharp utility knife.

- Immediately following installation, close off the area for 8 hours to avoid the damage or moving while the adhesive is in the early stages of cure.

NOTE: *The maximum recommended length for installation in outdoor situations is 5-foot (1524 mm), with a minimum 0.2 inches (5mm) gap between lengths. This allows for thermal expansion in extreme weather conditions and aids in water drainage off the step tread.*

3.06 INSTALLATION – CAST-IN-PLACE ALUMINUM PROFILE NOSINGS

A. Preparation of Riser Forms & Concrete Pouring

- Prepare the riser forms for the stairs in agreement with standard local building code requirements. Ensure that the riser forms are straight and true.
- Pour the concrete to form the stairs.
- Ensure that the Cast-in-Place nosing is covered with protective painters tape before placing it into the concrete and cut to the correct length according to the local building code requirements.

B. Installing the Aluminum Cast-in-Place Stair Nosing

- Ensure that the front edge of the nosing is flush with the riser form.
- Gently work the nosing into the concrete until the nosing's back edge is level with the finished edge of the tread. Work the nosing into the concrete until it is level, flush with the tread, and at the proper elevation.
- After the concrete has taken its initial set, remove the riser forms, and finish the concrete riser flush to the stair nosing front or otherwise specified.
- **NOTE:** This is important to ensure that the riser has a clean finish.
- To avoid unwanted glue residue on the cast-in-place stair nosing, remove the protective painter's tape from them immediately after they have been installed.

C. Installing the Step Edge Insert Strips on the Cast-in-Place Aluminum Nosing

- After measuring the step edge insert strip (follow local building code requirements) cut the step edge insert strip with a straight snip or cutting shears to the same measurements of the cast-in-place aluminum nosing profiles.
- Wipe away any dust or debris with a brush or shop vacuum.
- Place the plastic anchor fully into the drilled holes
- Apply a 1/8 inch (3.2 mm) bead of polyurethane adhesive in a wave pattern over the full length of the underside of the aluminum profile nosing.
- Apply even pressure to spread the adhesive beneath the strip using a hand roller.
- **NOTE:** Place in position on the aluminum nosing profile with the photoluminescent (glow) strip to the step edge's front edge.
- Once the adhesive has cured, trim excess from each strip with a sharp utility knife, careful not to damage or scratch the aluminum nosing profile.

- Immediately following the installation, close off the area for 8 hours to avoid the damage or moving while the adhesive is in the early stages of cure.

Note: *The use of very large aggregate in the concrete with a very low slump will make installing the cast-in-place stair nosing difficult.*

3.07 INSTALLATION - ALUMINUM TILE NOSING

A. Surface Preparation & Tile Installation

- Clean the floor of dust and debris. This ensures the tiled surface will be level.
- Measure to find the center of the stair or hallway landing, and snap two chalk lines that intersect precisely in the center of the floor.
- Before starting the project tile layout, start with a dry run, laying out the tiles and the spacers. This determines where to begin the process and helps determine the width of the grout lines.
- Snap an additional chalk line the width of a tile out from each wall. This will help keep the tile placement perfectly straight. Continue laying out tiles and spacers until placement is correct.
- Use a self-mix thin-set mortar for the tile installation. Pour just about an entire bag of the dry mixture into a large bucket (**NOTE:** best to follow thin-set manufacturers mixing instructions). Add just enough water to get the dry mixture wet, and begin mixing. Continue to mix until the texture is creamy. Then let the mortar stand for about 10 minutes to get tacky.
- When the mortar is ready, begin working on one section of the floor. Spread the mixture on a 2’ x 2’ (610 mm X 610 mm) section of the floor and use a notched trowel to obtain an even layer of mortar. Work in small areas to keep the mortar from drying before the tile is in position.
- Put the tiles in place at the step edge, and place Aluminum Tile Nosing at the step edge.

B. Installing the Tile Aluminum Nosing & Step Edge Insert Strips

- After measuring the nosing & step edge insert strip (follow local building code requirements), cut them with a cutting tool mentioned in section 3.03. The nosing & step edge insert strip to the same nosing/strip measurements.
- Wipe away any dust or debris with a brush or shop vacuum.
- Place the tile nosing at the edge of the step and use the thin-set mortar to adhere into place.
- Apply thin-set mortar to Tile Nose edge and lay the tile against the tile nose.

C. Installing the remaining tiles

- Repeat Section 3.07, Sub-section A.

- When you get to a wall where a standard tile will not fit, mark and make cuts with a standard tile cutter; if you don't use a tile cutter, mark the tiles and have a tile supplier cut them before installation.
- Continue the process, using the chalk line as a guide and placing spacers between each tile to ensure uniform distance between the tiles. When all the tile work is complete, allow the tiles to dry in place for several days before grouting.
- Grout is available in a variety of textures and colors. Pick a color that matches the color of the tile. Use a rubber trowel or float to spread the grout across the tiles at an angle to be sure to get it between each tile.
- When the gout is in place, wipe away the excess with a damp sponge or cloth. Repeat this process several times, being careful not to remove the grout lines around the tiles.

D. Installing the Step Edge Insert Strips on the Tile Aluminum Nosing

- Apply a 1/8 inch (3.2 mm) bead of polyurethane adhesive in a wave pattern over the full length of the underside of the aluminum profile nosing.
- Apply even pressure to spread the adhesive beneath the strip using a hand roller.
- **NOTE:** Place in position on the aluminum nosing profile with the photoluminescent (glow) strip to the step edge's front edge.
- When the adhesive has cured, trim excess from each strip with a sharp utility knife being careful not to damage or scratch the aluminum nosing profile.
- Immediately following the installation, close off the area for 8 hours to avoid the damage or moving while the adhesive is in the early stages of cure.

3.08 CLEANING & MAINTENANCE

Regular cleaning to remove built-up dirt and debris on the strips will ensure the Step Edge Non-Slip Insert Contrast Strips and Aluminum Stair Nosing will continue performing to expectation. **Note:** The photoluminescence will continue performing even after UV exposure or exposure to moisture. The only reason for degradation in the performance of the photoluminescence is a lack of proper cleaning.

A. Clean exposed surfaces, as recommended below.

- Vacuuming or brushing with a stiff bristle head (dry or wet) often enough to keep the nosing clean.
- The photoluminescent (glowing) strip portion can also be wiped clean with a (dry or wet) sponge or cloth.
- Regular observation will determine if cleaning is required; however, a standard clean every 4 to 6 weeks or after particularly heavy use should ensure correct performance.
- High-pressure water (but not steam cleaning) can also be used to clean the strips.

- Do not use highly alkaline or acidic cleaning agents. The pH of the cleaning agents should be between pH five (5) and pH 12. If cleaning agents are applied at more than pH 10, the strips should be rinsed with pH neutral (pH six (6) to pH eight (8)) solution afterwards.
- Annual visual checks of the step edge insert strips should be performed to ensure:
    - All step edge insert strips are still in place as installation, and there is no material damage to any of these products.
    - All step edge insert strips are clean from general dust build-up and any other specific obscuring debris such as gum, stains etc.
    - All step edge insert strips are visible and have not been covered up by carpet or other objects.
    - If used for Emergency Egress Escape Path Marking, all step edge insert strips must mark a clear path and must not be obstructed by physical hazards such as trolleys, machinery etc.
    - If step-edge insert strips are used for Emergency Egress Escape Path Marking, there must have been no change to the facility's configuration, which renders them unusable.
    - All lights required to charge step edge insert strips are operating as designed at installation, meeting the minimum of 11 Lux (1 foot-candle).

3.09 PROTECTION

A. Advise the contractor of procedures required to protect the finished work from damage by the work of other Sections during the remainder of the construction period.

B. Finished units shall be without damage. Units damaged during shipping or construction shall be repaired by the contractor at the expense of the party damaging the material, following the contract requirements.

End of Section

Updated 11/02/2020

ADA SOLUTIONS

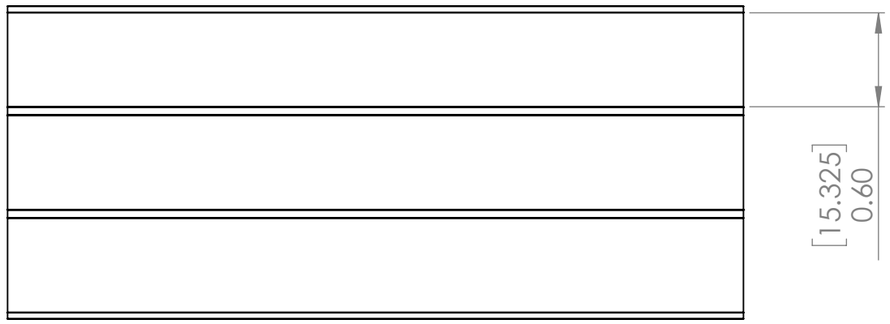

TOP VIEW

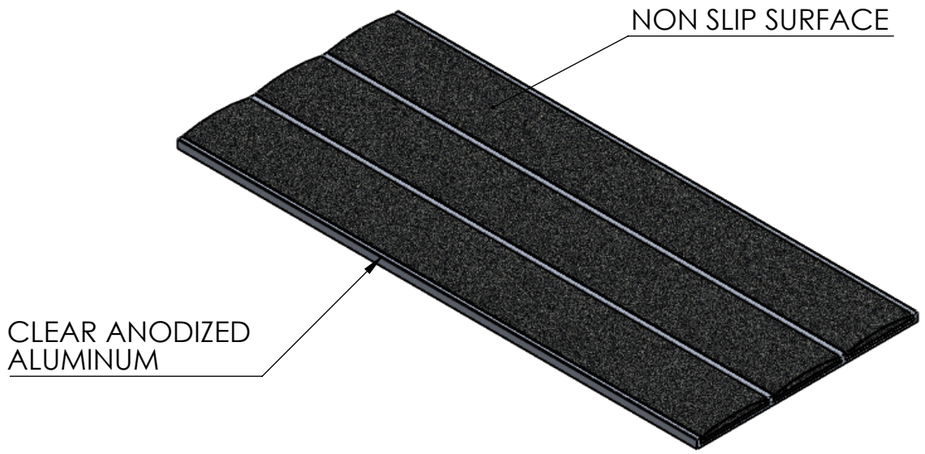

ISOMETRIC

FRONT VIEW

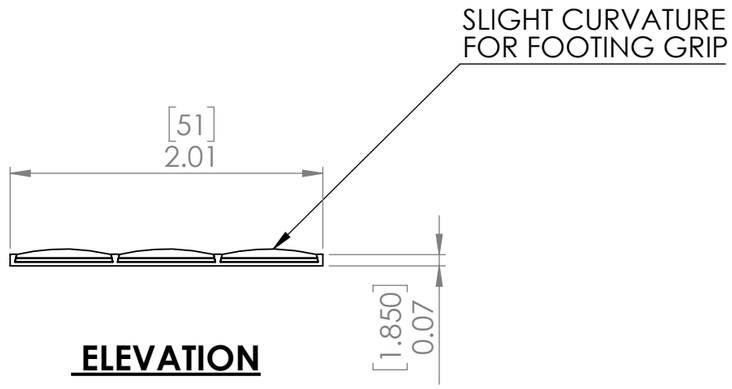

ELEVATION

NOTE:

ANTI-SLIP STRIPS ALSO COME IN YELLOW AND GREY

PRODUCT NO.

YELLOW - DNSICY
GREY - DNSICG

UNLESS OTHERWISE SPECIFIED: DIMENSIONS ARE IN MILLIMETERS SURFACE FINISH: TOLERANCES: LINEAR: +/- 0.1MM ANGULAR: +/- 1 DEGREE	FINISH: ALUMINUM IS CLEAR ANODIZED				DEBURR AND BREAK SHARP EDGES	DO NOT SCALE DRAWING / REVISION
	NAME	SIGNATURE	DATE			TITLE: ADA SOLUTIONS 51 mm (2 inch) Anti-Slip Contrast Insert Strip with Black Carborundum
DRAWN						
CHK'D						
APPV'D						
MFG						
Q.A				MATERIAL: T6063 ALUMINUM AND CARBORUNDUM		PRODUCT NO. DNSICB / A3
				WEIGHT:		SCALE: NTS / SHEET 1 OF 1

ADA SOLUTIONS

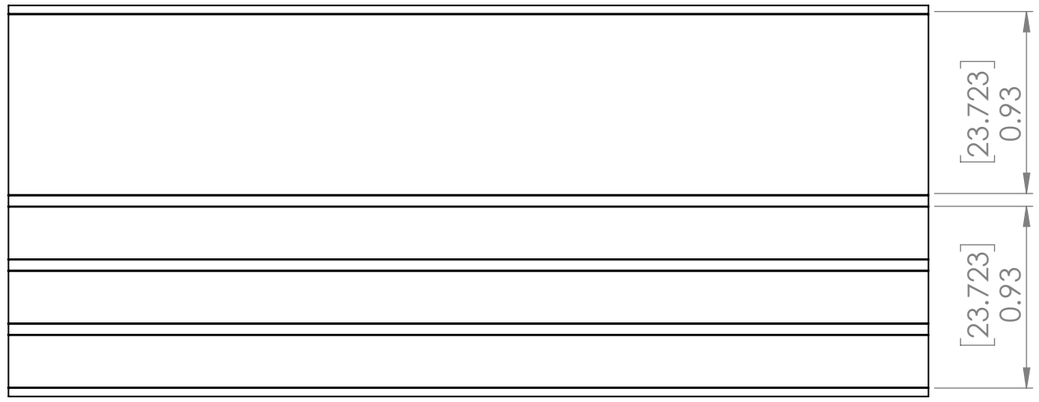

TOP VIEW

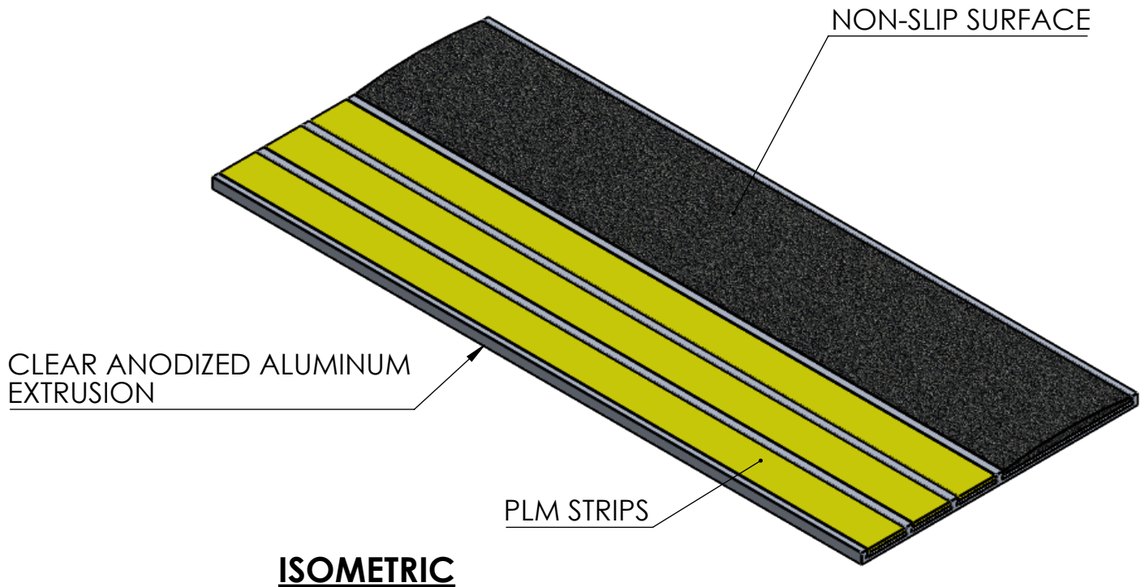

ISOMETRIC

FRONT VIEW

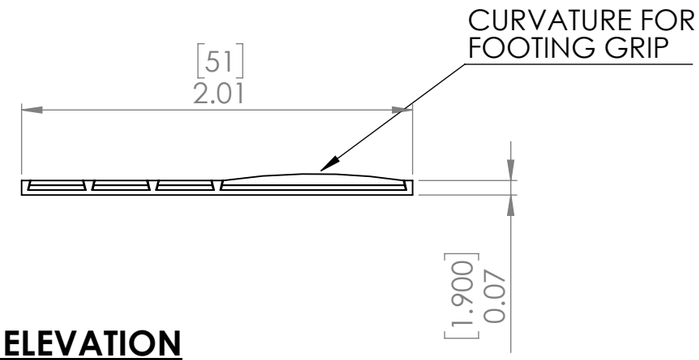

ELEVATION

NOTE:

ANTI-SLIP STRIPS PORTION ALSO COMES IN YELLOW AND GREY

PRODUCT NO.

YELLOW - DNSICPY
GREY - DNSICPG

UNLESS OTHERWISE SPECIFIED: DIMENSIONS ARE IN MILLIMETERS SURFACE FINISH: TOLERANCES: LINEAR: +/- 0.1MM ANGULAR: +/- 1 DEGREE	FINISH: ALUMINUM IS CLEAR ANODIZED			DEBURR AND BREAK SHARP EDGES	DO NOT SCALE DRAWING	REVISION
	NAME	SIGNATURE	DATE		TITLE: ADA Solutions 51 mm (2 inch) Anti-Slip Contrast Insert Strip with Black Carborundum & Photoluminescent Strip	
DRAWN						
CHK'D						
APPV'D						
MFG						
Q.A				MATERIAL: T6063 ALUMINUM WITH PLM AND CARBORUNDUM	PRODUCT NO. DNSICPB	A3
				WEIGHT:	SCALE: NTS	SHEET 1 OF 1

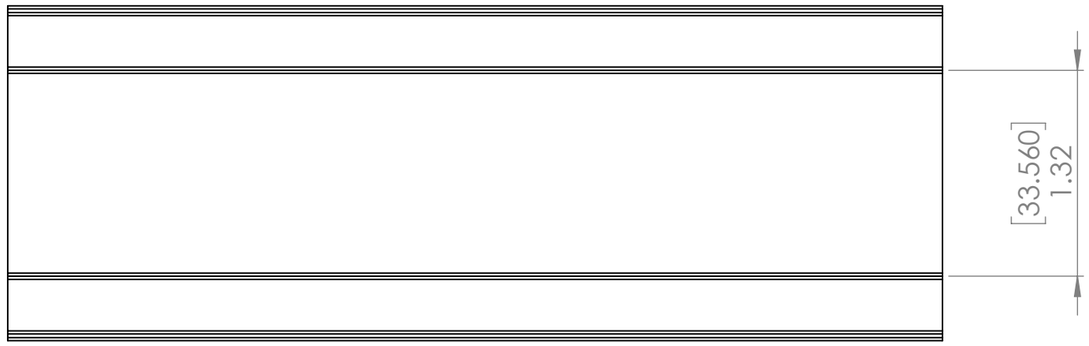

TOP VIEW

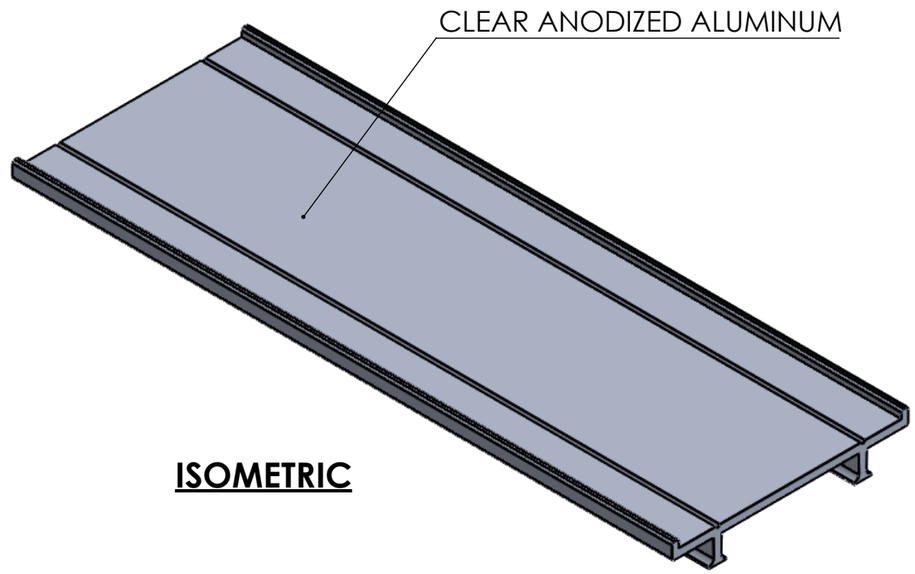

ISOMETRIC

FRONT VIEW

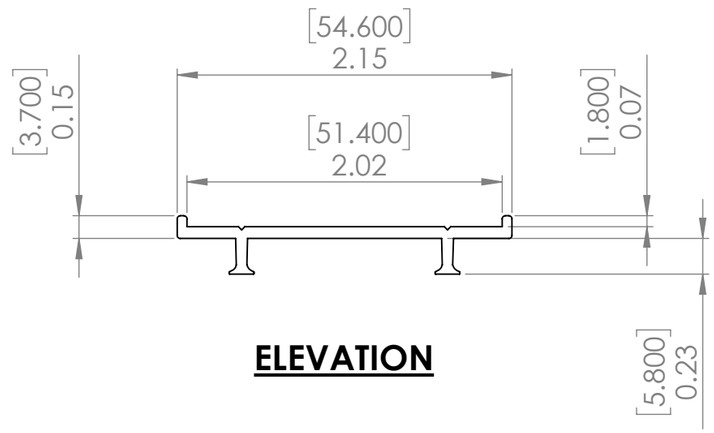

ELEVATION

ADA SOLUTIONS

UNLESS OTHERWISE SPECIFIED: DIMENSIONS ARE IN MILLIMETERS SURFACE FINISH: TOLERANCES: LINEAR: +/- 0.1MM ANGULAR: +/- 1 DEGREE	FINISH: CLEAR ANODIZED			DEBURR AND BREAK SHARP EDGES	DO NOT SCALE DRAWING	REVISION
	NAME	SIGNATURE	DATE		TITLE: ADA Solutions 3048 mm (10 FT) Cast-in-Place Step Edge Nosing	
DRAWN						
CHK'D						
APPV'D						
MFG						
Q.A				MATERIAL: ALUMINUM T6063	PRODUCT NO. DCIPN100	A3
				WEIGHT:	SCALE:NTS	SHEET 1 OF 1

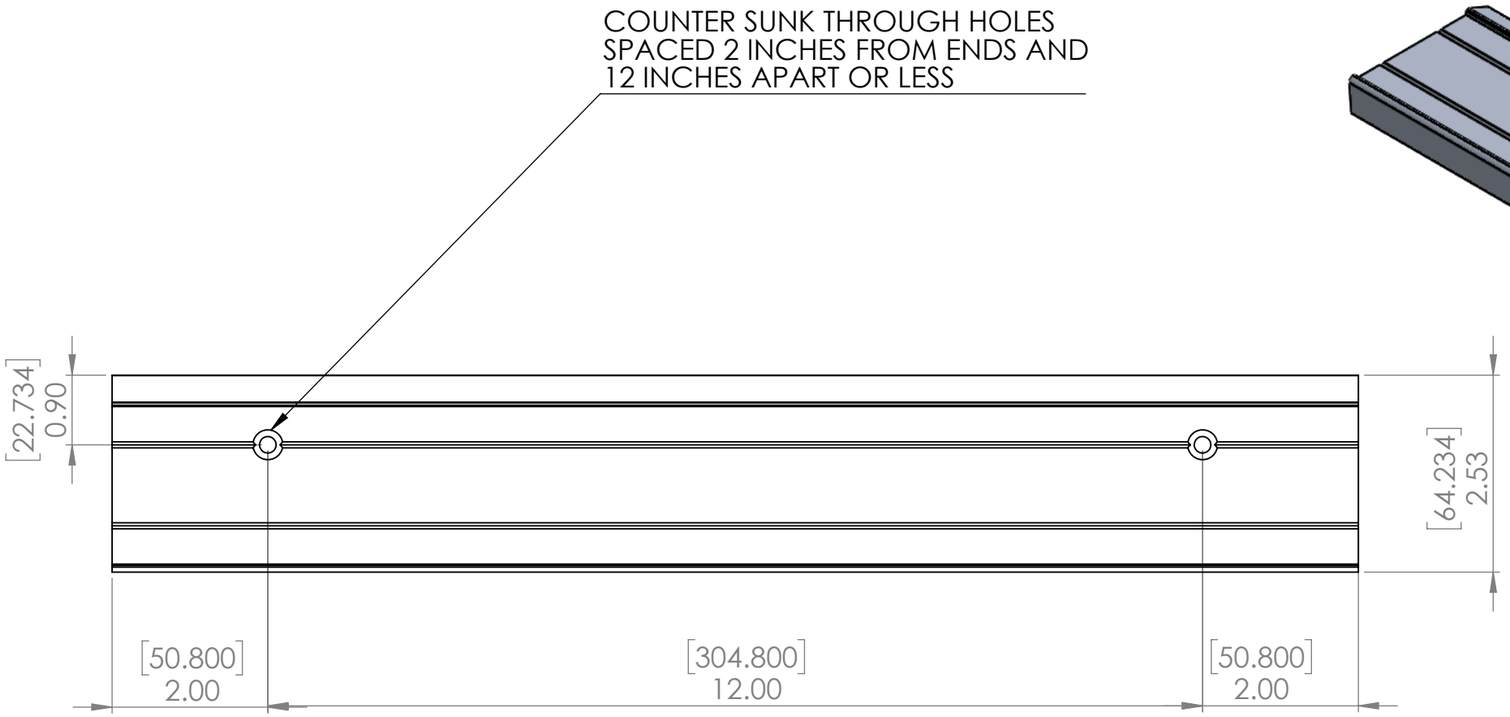

TOP VIEW

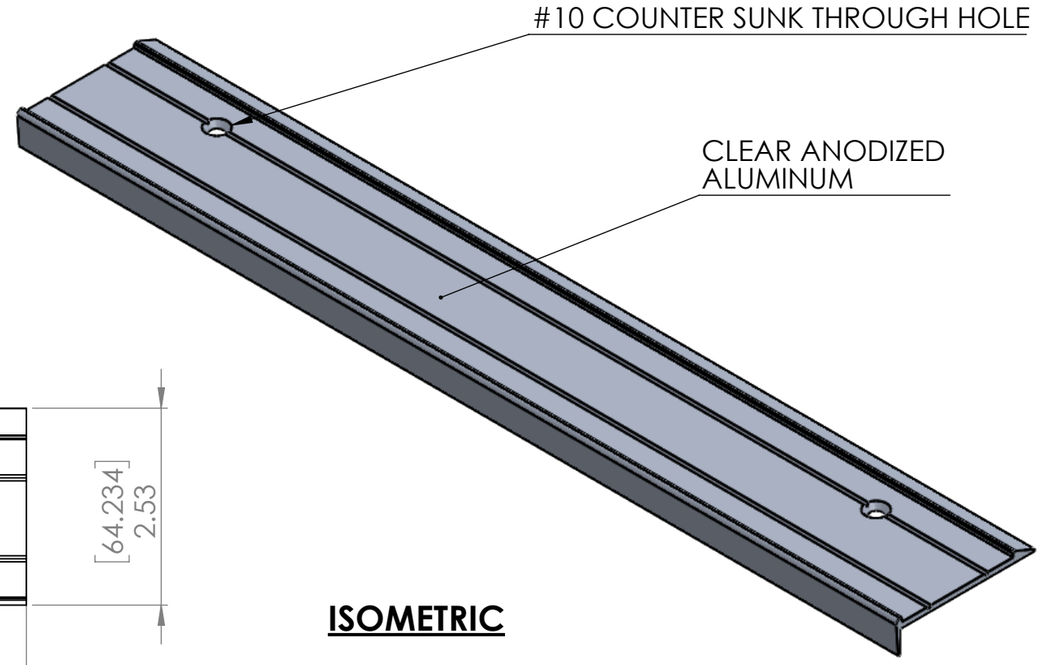

ISOMETRIC

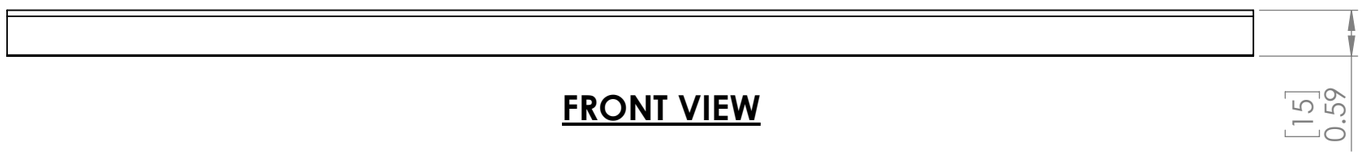

FRONT VIEW

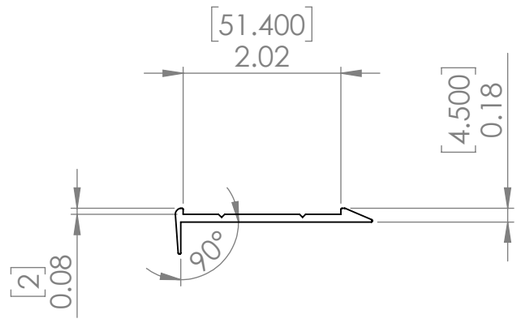

ELEVATION

ADA SOLUTIONS

UNLESS OTHERWISE SPECIFIED: DIMENSIONS ARE IN MILLIMETERS SURFACE FINISH: TOLERANCES: LINEAR: +/- 0.1MM ANGULAR: +/- 1DEGREE	FINISH: CLEAR ANODIZED				DEBURR AND BREAK SHARP EDGES	DO NOT SCALE DRAWING / REVISION
	NAME	SIGNATURE	DATE			TITLE: ADA Solutions 3048 mm (10 FT) Surface Applied (Retrofit) Step Edge Nosing - 90° Nose
DRAWN						
CHK'D						
APPV'D						
MFG						
Q.A				MATERIAL: ALUMINUM T6063		PRODUCT NO. DFSN200 / A3
				WEIGHT:		SCALE:NTS / SHEET 1 OF 1

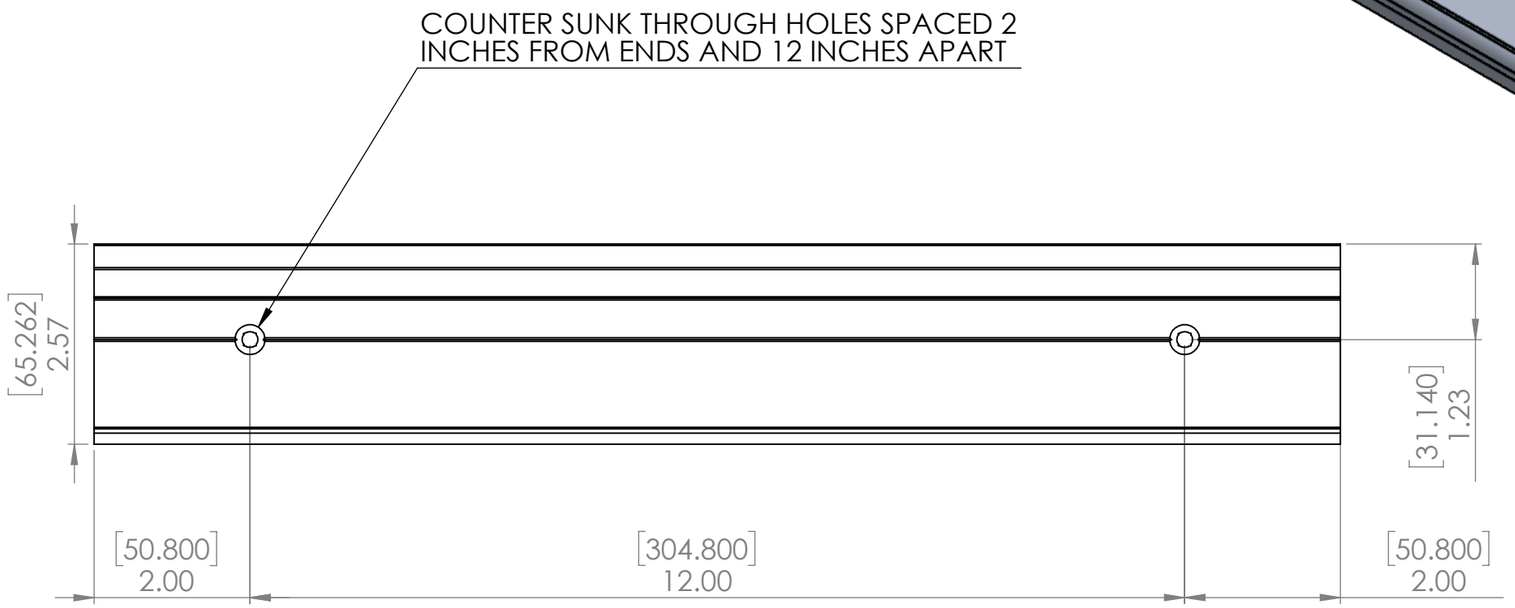

TOP VIEW

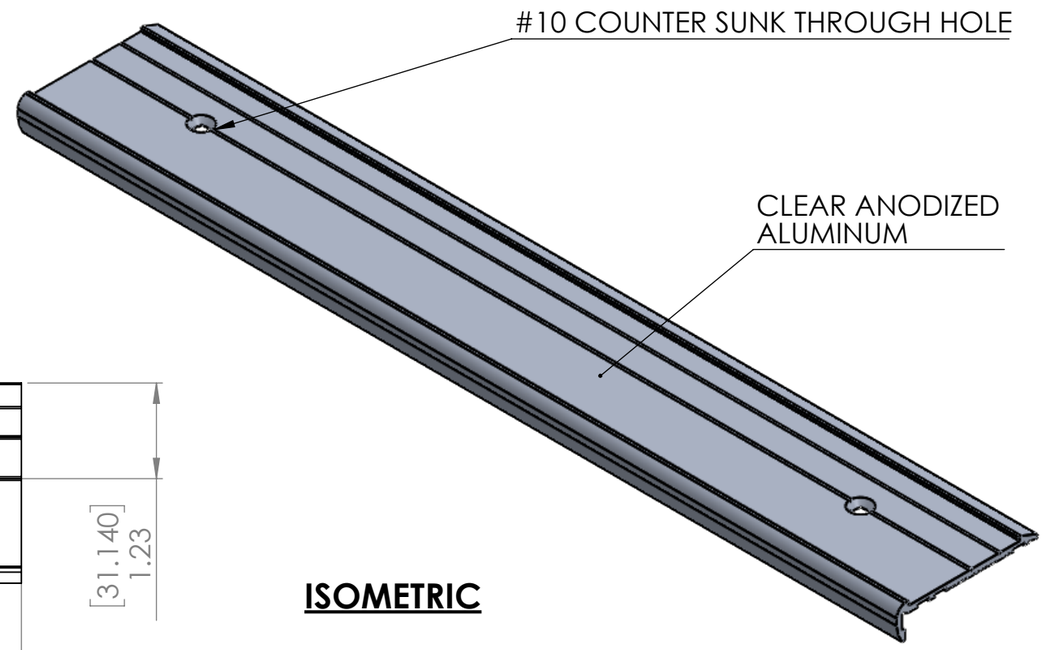

ISOMETRIC

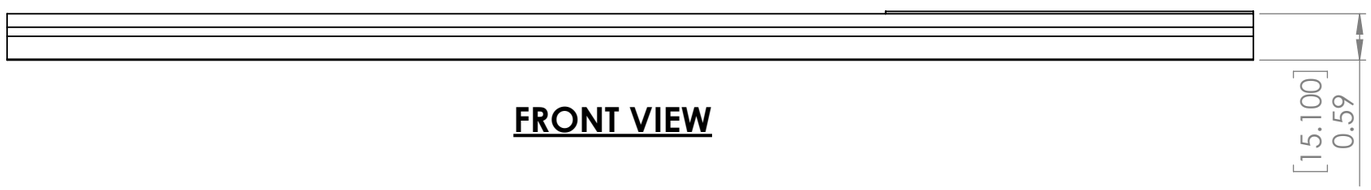

FRONT VIEW

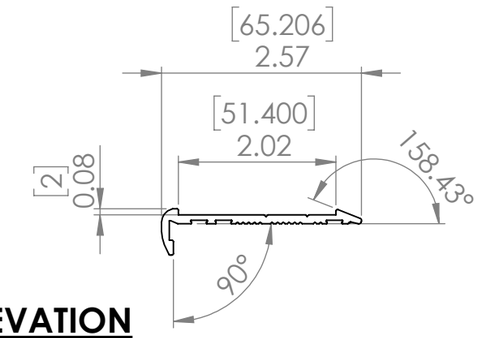

ELEVATION

ADA SOLUTIONS

UNLESS OTHERWISE SPECIFIED: DIMENSIONS ARE IN MILLIMETERS SURFACE FINISH: TOLERANCES: LINEAR: +/- 0.1MM ANGULAR: +/- 1 DEGREE	FINISH: CLEAR ANODIZED				DEBURR AND BREAK SHARP EDGES	DO NOT SCALE DRAWING / REVISION
	NAME	SIGNATURE	DATE			TITLE: ADA Solutions
DRAWN						3048 mm (10 FT) Surface Applied (Retrofit) Step Edge Nosing - Bull Nose
CHK'D						
APPV'D						
MFG						
Q.A				MATERIAL: ALUMINUM T6063		PRODUCT NO. DFSN100 — A3
				WEIGHT:		SCALE: NTS — SHEET 1 OF 1

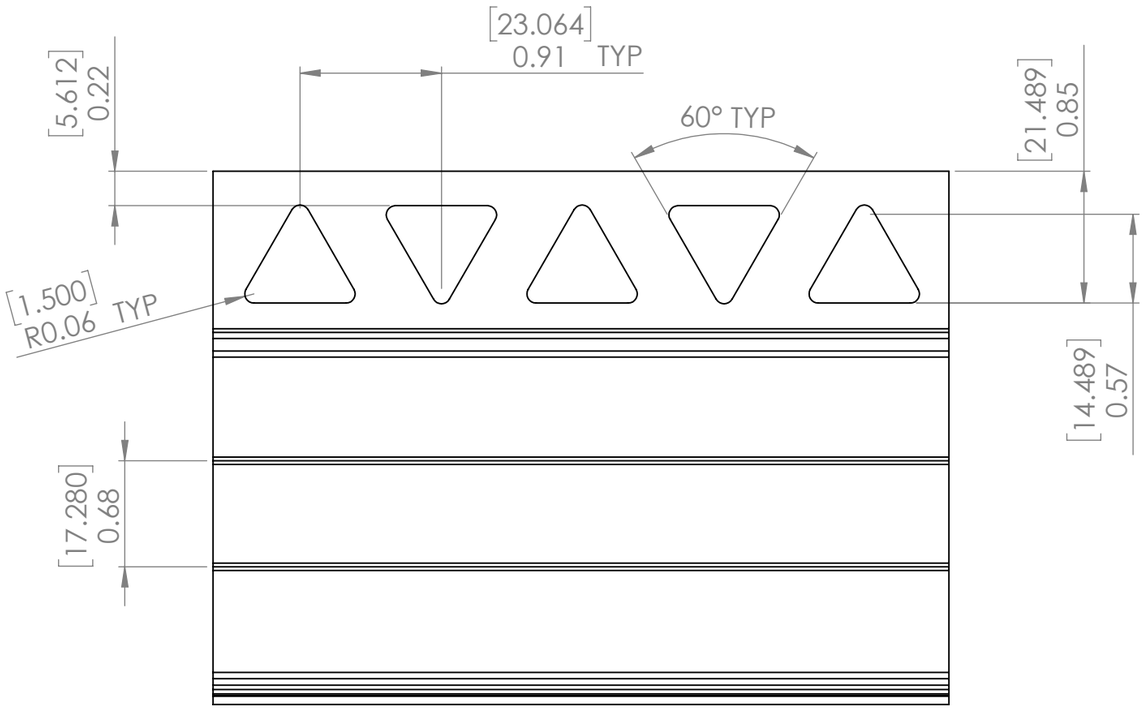

TOP VIEW

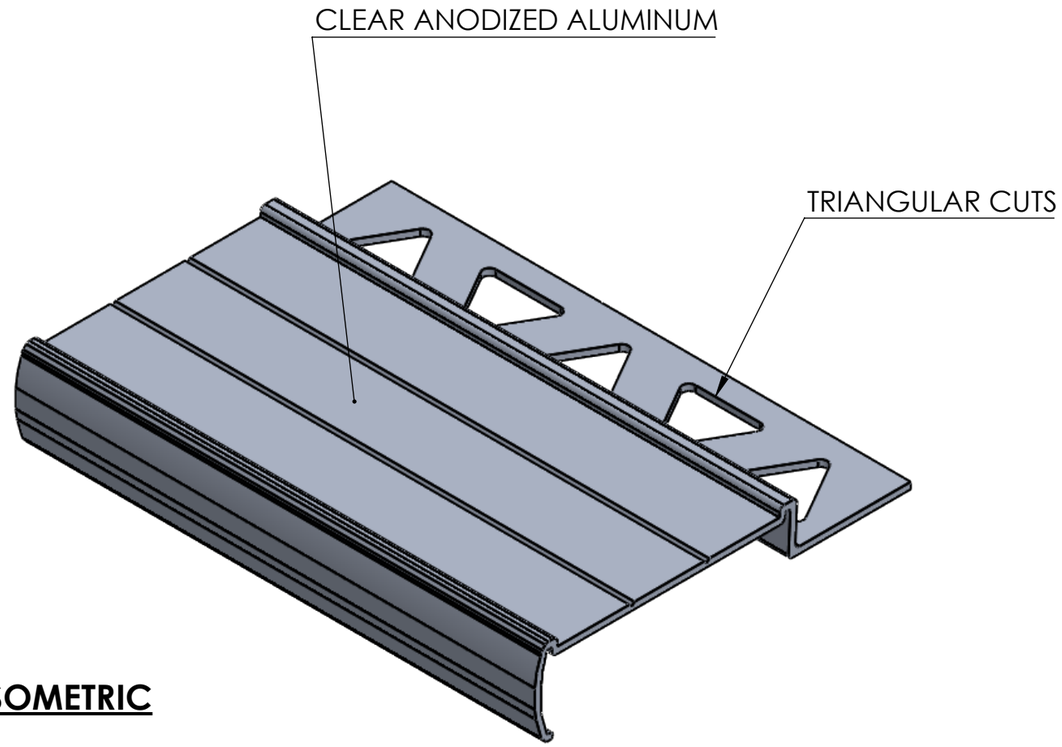

ISOMETRIC

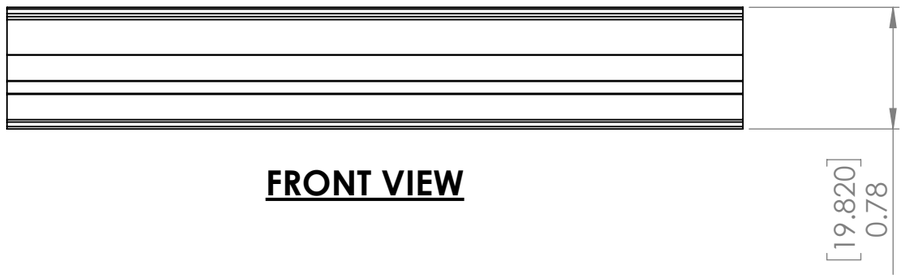

FRONT VIEW

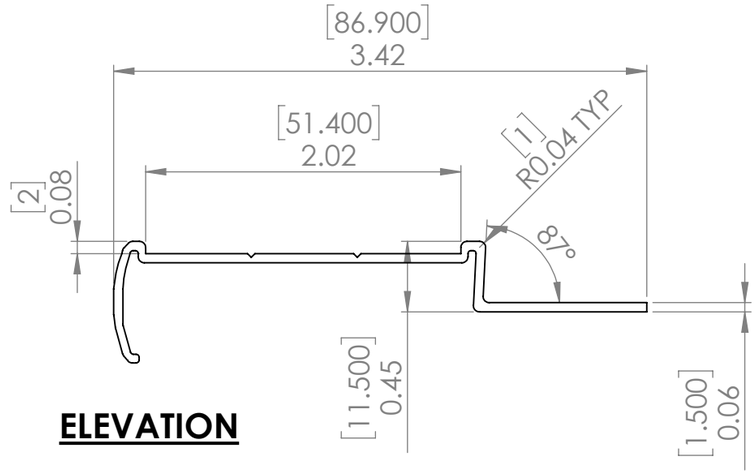

ELEVATION

ADA SOLUTIONS

UNLESS OTHERWISE SPECIFIED: DIMENSIONS ARE IN MILLIMETERS SURFACE FINISH: TOLERANCES: LINEAR: +/- 0.15MM ANGULAR: +/- 1 DEGREE	FINISH: CLEAR ANODIZED			DEBURR AND BREAK SHARP EDGES	DO NOT SCALE DRAWING	REVISION
	NAME	SIGNATURE	DATE		TITLE: ADA Solutions 3048 mm (10 FT) TILE NOSING	
DRAWN						
CHK'D						
APPV'D						
MFG						
Q.A				MATERIAL: ALUMINUM T6063	PRODUCT NO. DTILE100	A3
				WEIGHT:	SCALE:NTS	SHEET 1 OF 1